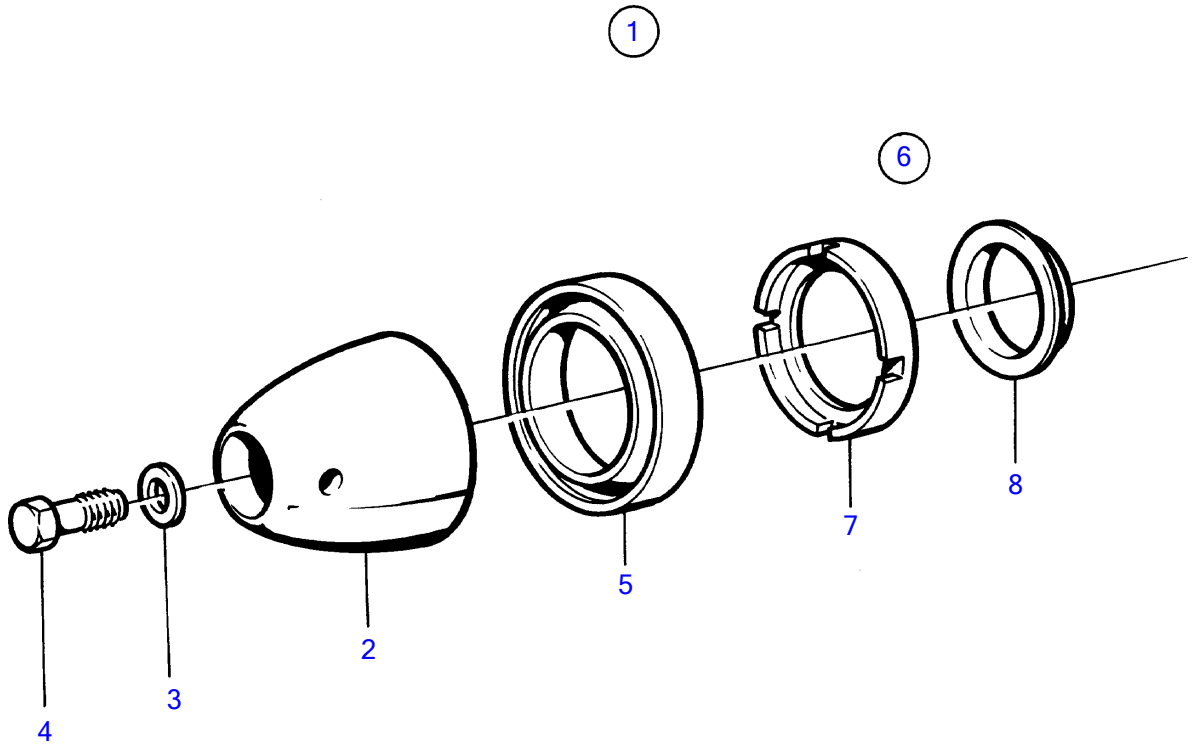

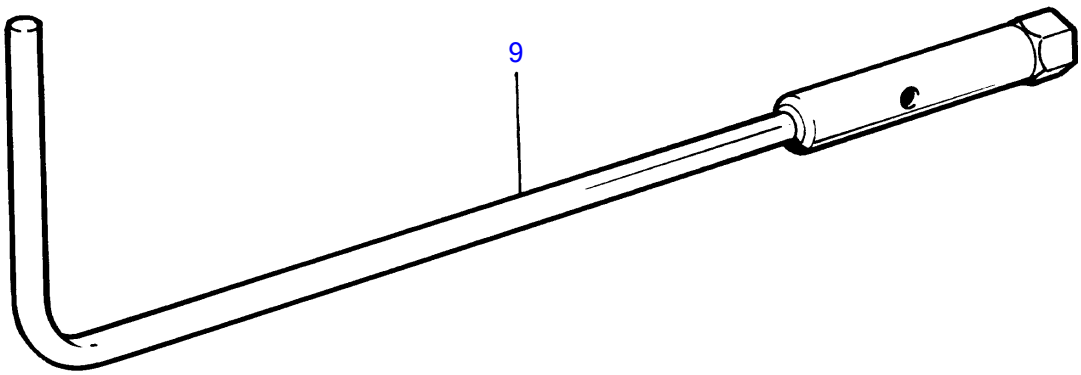

10098

REF	PART NO.	QTY	DESCRIPTION	NOTES
1	872614	1	Spinner	
2		1	▪ Spinner	Black
3	941670	1	▪ Washer	
4	872545	1	▪ Lock screw	
5	853676	1	▪ Spacer ring	
7	854294	1	▪ Plastic washer	
9	854669	1	Tool kit	